TP20 / TP20 NI modular probes

The TP20 is a 5-way or 6-way kinematic touch-trigger probe. Its two piece design comprises a probe body and detachable stylus module(s), which gives the ability to change stylus configurations either manually or automatically without re-qualification of the stylus tips, providing significant time savings in inspection routines.

A direct replacement for the industry standard Renishaw TP2 probe, the TP20 probe system brings a range of new benefits to manual and DCC CMM applications, and can easily be retrofitted to existing TP2 installations.

The TP20 can be used on a wide range of Renishaw's manual or motorised probe heads, either by direct mounting using the standard M8 thread or, alternatively, by using a PAA# adaptor to connect to an autojoint.

The system components are:

- TP20/TP20 NI probe body
- TP20 stylus module – seven module variants allow for optimisation of performance to suit the application
- MCR20 module changing rack – automatic operation
- The TP20 probe system may be used with Renishaw's PI 4-2, PI 7-2 or PI 200 probe interfaces (see section 9)

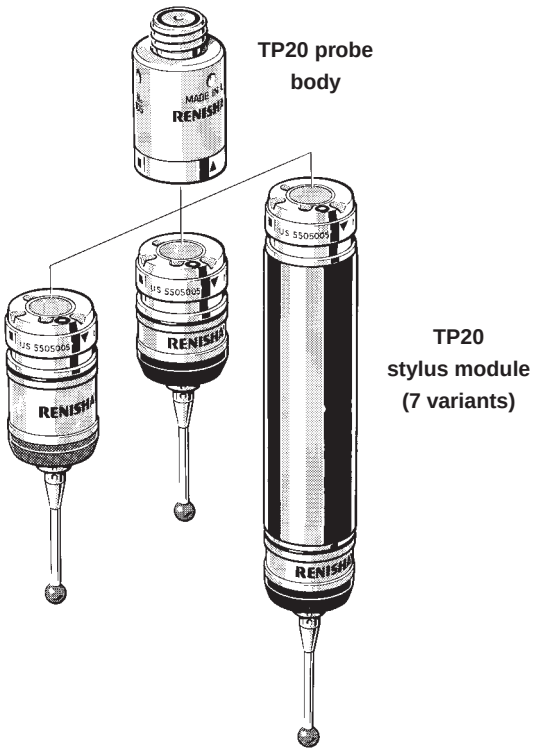

TP20 probe body

The TP20 probe body houses one half of the highly repeatable magnetic kinematic coupling that attaches the stylus module and body. The body also contains a magnetic proximity switch to inhibit triggering of the probe during automatic module changing with MCR20.

NOTE: If the probe is operated close to magnetised parts/clamping etc, the probe trigger may become inhibited. Countermeasures include the use of long styli, stylus extensions or body orientation to increase the distance to the magnetic source. Alternatively, use the TP20 NI probe body.

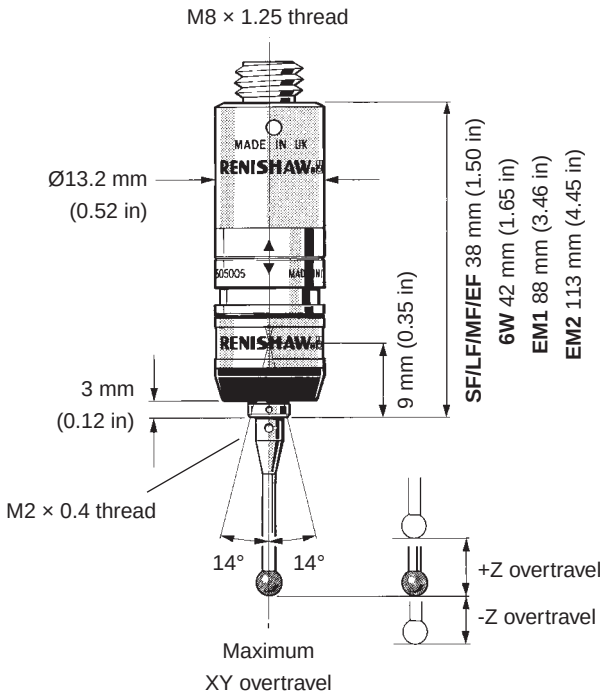

+Z overtravel		-Z overtravel
SF/EM1/EM2	4 mm (0.16 in)	**6W** 1.5 mm (0.06 in)
LF	3.1 mm (0.12 in)	
MF	3.7 mm (0.15 in)	
EF	2.4 mm (0.09 in)	
6W	4.5 mm (0.18 in)	

TP20 NI probe body

The TP20 NI probe differs from the TP20 body in that it is not affected by magnetic fields. However the probe trigger must be inhibited through software during change cycles using the MCR20.

TP20 stylus module

The TP20 stylus module houses the kinematic switching touch sensor mechanism, carries the stylus assembly and provides overtravel in ±X, ±Y and +Z axes (or ±Z in the case of TP20 6-way module). The stylus mounting thread accepts styli from the Renishaw M2 range.

A range of seven, application specific, stylus modules is available, being identified by coloured caps:

- **SF -** Standard force stylus module (black cap)
- **LF -** Low force stylus module (green cap)
- **MF -** Medium force stylus module (grey cap)
- **EF -** Extended force stylus module (brown cap)
- **6W -** 6-way stylus module (blue cap)
- **EM1 SF -** Standard force extension module
- **EM2 SF -** Standard force extension module

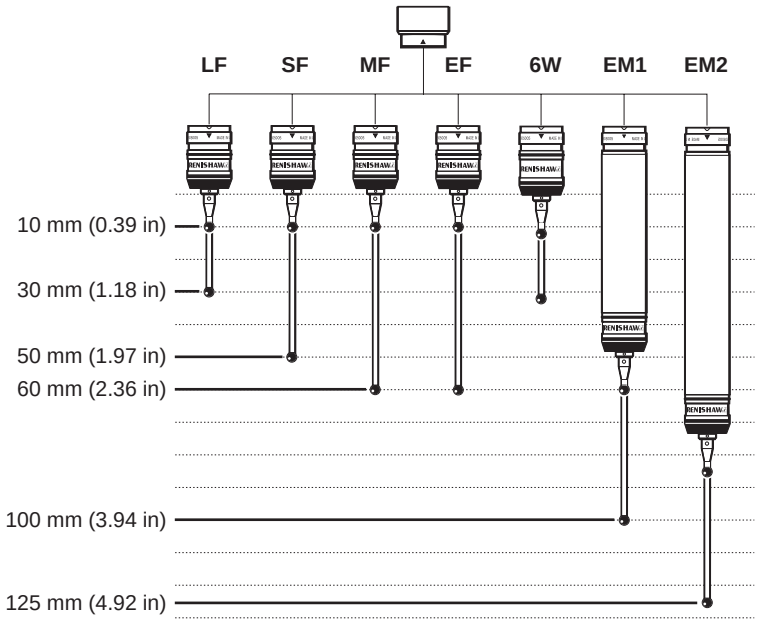

Stylus comparison

MCR20 module changing rack

The MCR20 probe module changing rack is designed to securely store stylus modules ready for rapid automatic changing, whilst protecting mating surfaces from any airborne contaminants within the working environment.

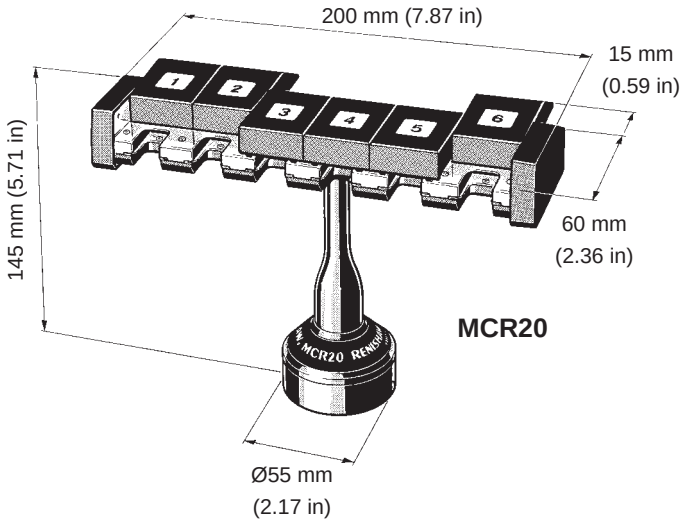

MSR1 module storage rack

For manual storage of modules - see section 13.

Probe maintenance

CK200 (Renishaw part number A-1085-0016) is a specialised cleaning material supplied for the removal of contamination from the location faces of the magnetically retained kinematic couplings of the TP20, TP200 and SP25M probe systems. The frequency of cleaning should be determined according to the conditions of use.

TP20 / TP20 NI features and benefits:

- A kinematic touch-trigger probe system for manual and DCC CMMs
- Rapid exchange between stylus configurations without the need to re-calibrate
- A choice of seven stylus modules, giving 5-axis or 6-axis operation, allow optimisation of probe and stylus performance to the given application
- Easily retrofitted to all Renishaw standard probe heads (M8 or autojoint fitting) and compatible with existing TTP interfaces
- Metrology performance equivalent to industry proven TP2-5W probe
- Compatible with the full range of Renishaw probe heads and accessories

Specification summary (1)		TP20	TP20 NI
PRINCIPAL APPLICATION		DCC and manual CMMs suitable for most applications.	DCC and manual CMMs where operation is within a magnetic field.
SENSE DIRECTIONS	All modules except 6W	5-axis: ±X, ±Y, +Z	5-axis: ±X, ±Y, +Z
	6W	6-axis: ±X, ±Y, ±Z	6-axis: ±X, ±Y, ±Z
PRE-TRAVEL VARIATION	LF	±0.60 µm (±0.000023 in)	±0.60 µm (±0.000023 in)
	SF/EM1/EM2	±0.80 µm (±0.000032 in)	±0.80 µm (±0.000032 in)
	MF	±1 µm (±0.000039 in)	±1 µm (±0.000039 in)
	EF	±2 µm (±0.000079 in)	±2 µm (±0.000079 in)
	6W	±1.50 µm (±0.000058 in)	±1.50 µm (±0.000058 in)
UNIDIRECTIONAL REPEATABILITY (2σ µm) (at stylus tip)	SF/LF/EM1/EM2	±0.35 µm (±0.000014 in)	±0.35 µm (±0.000014 in)
	MF	±0.50 µm (±0.000020 in)	±0.50 µm (±0.000020 in)
	EF	±0.65 µm (±0.000026 in)	±0.65 µm (±0.000026 in)
	6W	±0.80 µm (±0.000032 in)	±0.80 µm (±0.000032 in)
REPEATABILITY OF STYLUS CHANGE (maximum)	With MCR20	±0.50 µm (±0.000020 in)	±0.50 µm (±0.000020 in)
	Manual	±1 µm (±0.000040 in)	±1 µm (±0.000040 in)
STYLUS RANGE		M2	M2
MOUNTING METHOD		M8 thread	M8 thread
SUITABLE INTERFACE		PI 4-2, PI 7-2, PI 200, UCC	PI 4-2, PI 7-2, PI 200, UCC
STYLUS MODULE CHANGING RACK	Automatic	MCR20	MCR20
	Manual	MSR1	MSR1

Above data applies for test conditions as follows: Stylus length 10 mm (0.39 in). Stylus velocity 480 mm/min (1.57 ft/min)

Specification summary (2)

Module	Application guide	Maximum extension on PH10 series head	Weight (body and module)
LF	The low force stylus module, identified by a green cap, is suited to applications that require low trigger force, e.g. rubber seals.	300 mm (11.81 in)	22 g (0.78 oz)
SF	The standard force stylus modules, identified by black caps, are suited to the majority of applications.	300 mm (11.81 in)	22 g (0.78 oz)
EM1		300 mm (11.81 in)*	28 g (0.99 oz)
EM2		300 mm (11.81 in)*	30 g (1.06 oz)
MF	The medium force stylus module, identified by a grey cap, is for use where a higher trigger force than standard is required.	300 mm (11.81 in)	22 g (0.78 oz)
EF	The extended force stylus module is identified by a brown cap. Typically, this stylus module will only be required with large stylus assemblies, and where spurious 'air' triggers caused by machine vibration and acceleration, preclude the use of either SF, LF or MF modules.	300 mm (11.81 in)	22 g (0.78 oz)
6W	The 6-way stylus module, identified by a blue cap, has been designed for applications requiring measurement in the –Z direction, for example when measuring the width of undercuts.	300 mm (11.81 in)	22 g (0.78 oz)

* **NOTE:** Dependant on CMM used and operating conditions.

Specification summary (3)

Module type and text stylus length	Trigger force		Overtravel force			Overtravel displacement		
	XY	Z	XY	+Z	-Z	XY	+Z	-Z
LF 10 mm	0.06 N	0.65 N	0.09 N	1.15 N	-	±14°	3.10 mm (0.12 in)	-
SF **EM1** **EM2** 10 mm	0.08 N	0.75 N	0.20 N to 0.30 N	3.50 N	-	±14°	4 mm (0.16 in)	-
MF 25 mm	0.10 N	1.9 N	0.20 N to 0.40 N	7 N	-	±14°	3.70 mm (0.15 in)	-
EF 50 mm	0.10 N	3.2 N	0.20 N to 0.50 N	10 N	-	±14°	2.40 mm (0.09 in)	-
6W 10 mm	0.14 N	1.60 N	0.25 N	2.50 N	9 N	±14°	4.50 mm (0.18 in)	1.50 mm (0.06 in)

Above data applies for test conditions as follows: Stylus length as stated above. Stylus velocity 480 mm/min (1.57 ft/min)